ASSEMBLY NOTES:

1. UNLESS DRAWINS ARE MARKED "FOR CONSTRUCTION", THEY SHALL NOT BE USED FOR CONSTRUCTION PURPOSES
2. DO NOT OBTAIN DIMENSIONS BY SCALING FROM DRWAING
3. REMOVE AL BURRS AD SHARP EDGES
4. ALL CUTS TO BE A MINIMUM OF CLASS 2 3.2 FINISH UNO

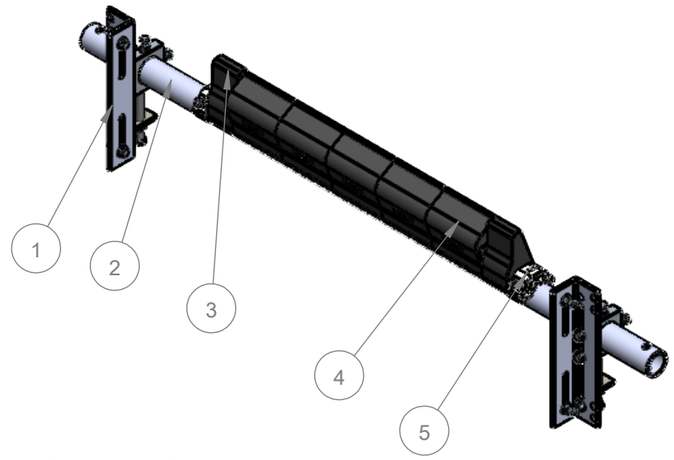

82 261 14 04

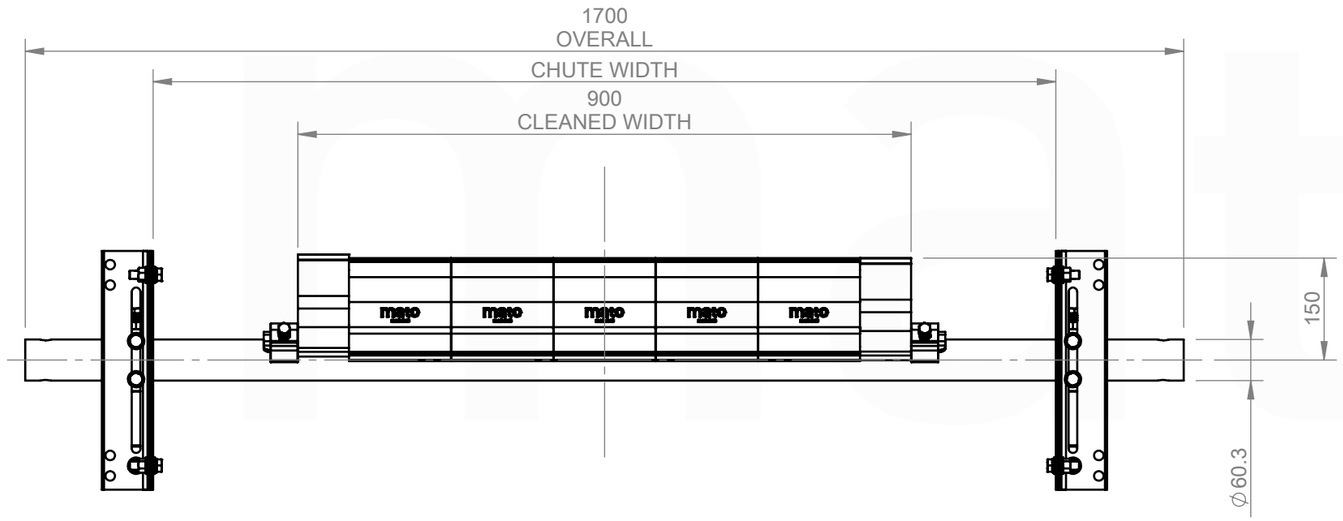

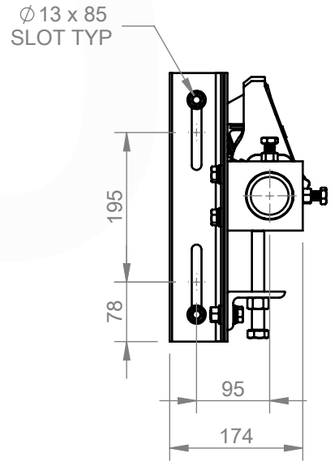

CHUTE CUT OUT DETAIL:
REFER TO CUT OUT TEMPLATE
MUS2 BOLT TENSION INSTALLATION TEMPLATE

ITEM NO.	DESCRIPTION	QTY.	PART No.	MASS k/g
1	60.3 MCS2 BT END ASSEMBLY STAINLESS STEEL	1	82 210 00 60	9.97
2	MUS Shaft suits 900mm STAINLESS STEEL	1	82 200 21 04	15.64
3	MUS2 POLY END BLADE	2	81 260 00 05	0.58
4	MUS2 TL BLADE ASSEMBLY, 65 DURO	5	82 260 00 05	2.02
5	MUS2,3 & 4 END STOP	2	81 240 00 07	0.56

REVISIONS

REV.	DESCRIPTION	BY	APR'VD	DATE
A	ISSUED FOR CONSTRUCTION	JS	DG	08/09/25

MACHINING AND FABRICATION TOLERANCES
UNO:
(ALL DIMENSIONS IN mm)

DIMENSIONAL TOLERANCE:
X.X ±1.0
X.XX ±0.5
X.XXX ±0.1
X.XXXX ±0.01
ANGLE:
X.X ±1.0°
X.XX ±0.5°

PIPE STRAIGHTNESS
<1000 ±3.0
<2000 ±6.0
<3000 ±9.0

HOLE CENTERS:
±0.5

THERMAL CUTTING: ±1.0
WELDMENTS: ±2.0
CASTINGS; REFER TO CASTING NOTES
MACHINING "ROUGH" TO ISO 2768-vL
MACHINING STD. TO ISO 2768-mK
POLYURETHANE: ±2.0
WELD SYMBOLS:
IN ACCORDANCE TO ISO 2553

MACHINED SURFACES UNO:
TO BE 12.5 WHERE INDICATED "ROUGH"
TO BE 3.2 WHERE NOT INDICATED

MATERIAL: N/A
FINISH: N/A
COLOUR: N/A
MFG'D: INTERNAL
SCALE: DO NOT SCALE

DRAWN BY: JS
CHECKED: DG 08/09/25
APPROVED: DG 08/09/25
CREATED: 24/07/2025

DESCRIPTION: MUS2-TL-BT-900-S/S

PART NO. 82 261 14 04

MASS: 38.01 KG

3RD ANGLE PROJECTION

PROFILE CUT ITEMS:
TO BE CUT FROM SUPPLIED DXF CAD FILE WHERE APPLICABLE
ADDITIONAL DIMENSIONS CAN BE PROVIDED ON REQUEST.
DO NOT SCALE IF IN DOUBT

© COPYRIGHT. ALL RIGHTS RESERVED

THIS DRAWING IS STRICTLY CONFIDENTIAL AND MUST NOT BE COPIED, REPRODUCED OR ADAPTED, NOR MAY ARTICLES BE MANUFACTURED IN ACCORDANCE WITH THE DRAWING WITHOUT PRIOR WRITTEN PERMISSION OF MATO AUSTRALIA PTY LTD.

mato
MATO AUSTRALIA PTY LTD
(INCORPORATED IN NSW) ABN 82 050 057 726
39 BONVILLE AVE.
THORNTON NSW 2322
PH: 1300 850 795 FAX: (02)4936 1388

DRAWING NO.	PG. SIZE	SHEET	REV
8184	A3	1 / 1	A

C:\MatoVault\MatoVault01-Production\NEW FOLDER STRUCTURE\SECONDARY CLEANERS\MUS RANGE\MUS2\BOLT TENSION\82 261 14 04\CAD FILES\82 261 14 04