ASSEMBLY NOTES:

1. UNLESS DRAWINS ARE MARKED "FOR CONSTRUCTION", THEY SHALL NOT BE USED FOR CONSTRUCTION PURPOSES
2. DO NOT OBTAIN DIMENSIONS BY SCALING FROM DRWAING
3. REMOVE AL BURRS AD SHARP EDGES
4. ALL CUTS TO BE A MINIMUM OF CLASS 2 3.2 FINISH UNO

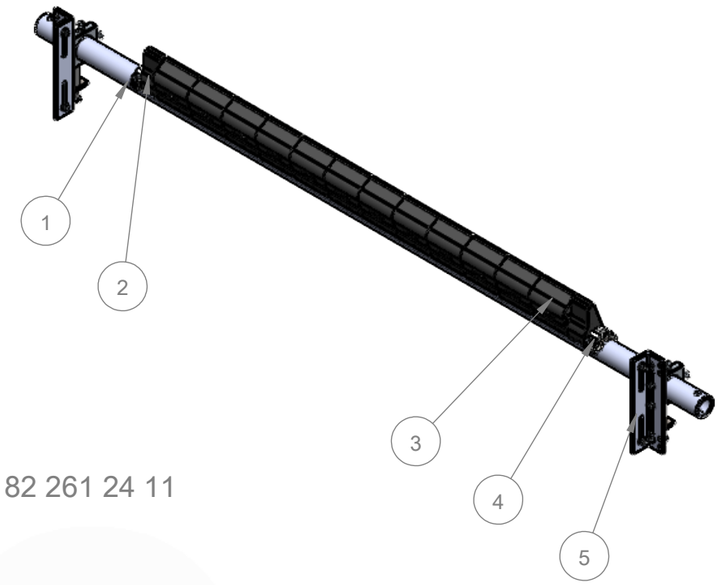

82 261 24 11

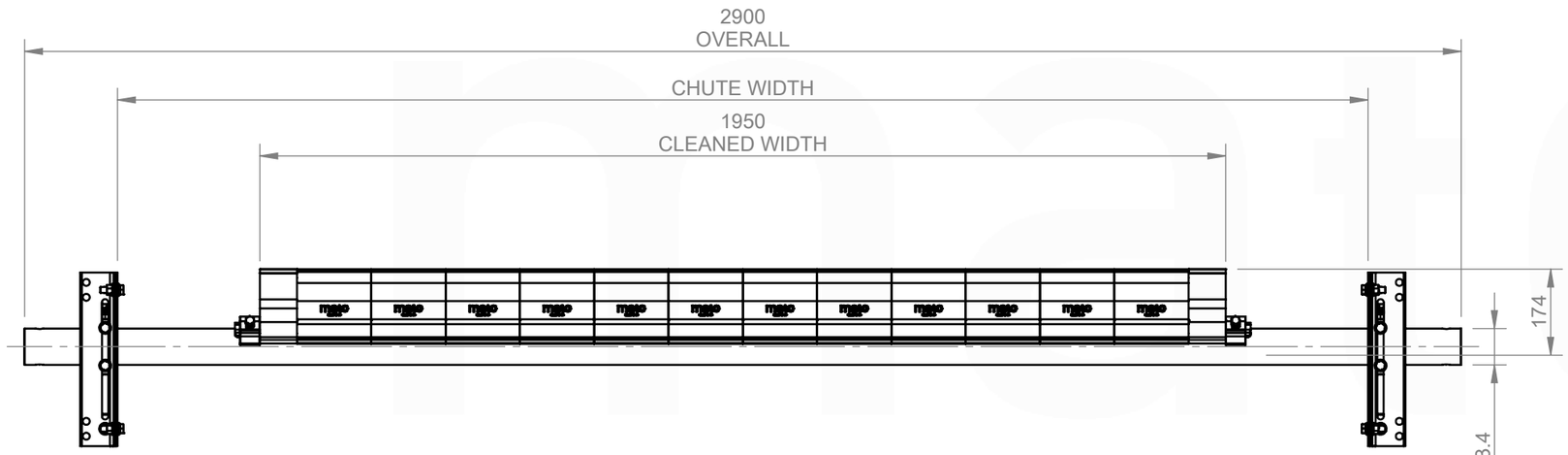

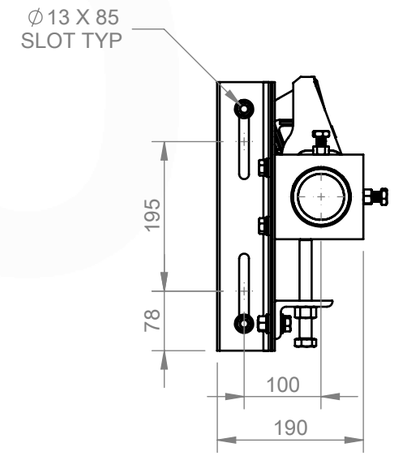

CHUTE CUT OUT DETAIL:
REFER TO CUT OUT TEMPLATE
MUS2 BOLT TENSION INSTALLATION TEMPLATE

ITEM NO.	DESCRIPTION	QTY.	PART No.	MASS k/g
1	MUS Shaft suits 2000mm STAINLESS STEEL	1	82 200 21 11	38.13
2	MUS2 POLY END BLADE	2	81 260 00 05	0.58
3	MUS2 Ti BLADE ASSEMBLY, 65 DURO	12	82 260 00 04	2.02
4	MUS2,3 & 4 END STOP	2	81 240 00 07	0.56
5	73.0mm MCS2 & 3 & 4 BOLT TENSIONED - IC STYLE	1	82 210 00 73	10.82

REVISIONS

REV.	DESCRIPTION	BY	APR'VD	DATE
A	ISSUED FOR CONSTRUCTION	JS	DG	05/09/25

MACHINING AND FABRICATION TOLERANCES
UNO:
(ALL DIMENSIONS IN mm)

DIMENSIONAL TOLERANCE:
X.X ±1.0
X.XX ±0.5
X.XXX ±0.1
X.XXXX ±0.01
ANGLE:
X.X ±1.0°
X.XX ±0.5°

PIPE STRAIGHTNESS
<1000 ±3.0
<2000 ±6.0
<3000 ±9.0

HOLE CENTERS:
±0.5

THERMAL CUTTING: ±1.0
WELDMENTS: ±2.0
CASTINGS; REFER TO CASTING NOTES
MACHINING "ROUGH" TO ISO 2768-vL
MACHINING STD: TO ISO 2768-mK
POLYURETHANE: ±2.0
WELD SYMBOLS:
IN ACCORDANCE TO ISO 2553

MACHINED SURFACES UNO:
12.5 TO BE WHERE INDICATED "ROUGH"
3.2 TO BE WHERE NOT INDICATED

MATERIAL: N/A
FINISH: N/A
COLOUR: N/A
MFG'D: INTERNAL
SCALE: DO NOT SCALE

DRAWN BY: JS
CHECKED: DG 05/09/25
APPROVED: DG 05/09/25
CREATED: 24/07/2025

DESCRIPTION: MUS2-TI-BT-2000-S/S

PART NO. 82 261 24 11

MASS: 75.49 KG

3RD ANGLE PROJECTION

PROFILE CUT ITEMS:
TO BE CUT FROM SUPPLIED DXF CAD FILE WHERE APPLICABLE
ADDITIONAL DIMENSIONS CAN BE PROVIDED ON REQUEST.
DO NOT SCALE IF IN DOUBT

© COPYRIGHT. ALL RIGHTS RESERVED
THIS DRAWING IS STRICTLY CONFIDENTIAL AND MUST NOT BE COPIED, REPRODUCED OR ADAPTED, NOR MAY ARTICLES BE MANUFACTURED IN ACCORDANCE WITH THE DRAWING WITHOUT PRIOR WRITTEN PERMISSION OF MATO AUSTRALIA PTY LTD.

mato
MATO AUSTRALIA PTY LTD
(INCORPORATED IN NSW) ABN 82 050 057 728
39 BONVILLE AVE
THORNTON NSW 2322
PH: 1300 850 795 FAX: (02)4936 1388

DRAWING NO. 8180
PG. SIZE A3
SHEET 1 / 1
REV A

C:\MatoVault\MatoVault\01-Production\NEW FOLDER STRUCTURE\SECONDARY CLEANERS\MUS RANGE\MUS2\BOLT TENSION\82 261 24 11\CAD FILES\82 261 24 11